WDUP-A003

Electrical Specifications

Parameter	Frequency [MHz]	Specification -40℃ to 85℃	Typical Value @25℃
TX to ANT / ANT to TX			
Insertion Loss	880 – 915	4.0dB max	3.4dB
Passband Ripple	880 – 915	3.0dB max	2.7dB
Return Loss	880 – 915	14dB min	16dB
Attenuation	925 – 960	50dB min	54dB
ANT to RX / RX to ANT			
Insertion Loss	925 – 960	3.6dB max	3.3dB
Passband Ripple	925 – 960	3.0dB max	2.6dB
Return Loss	925 – 960	10dB min	13dB
Attenuation	880 – 915	50dB min	54dB
Impedance		50 Ohm	50 Ohm
Input power		1Watt max	

Electrical Performance

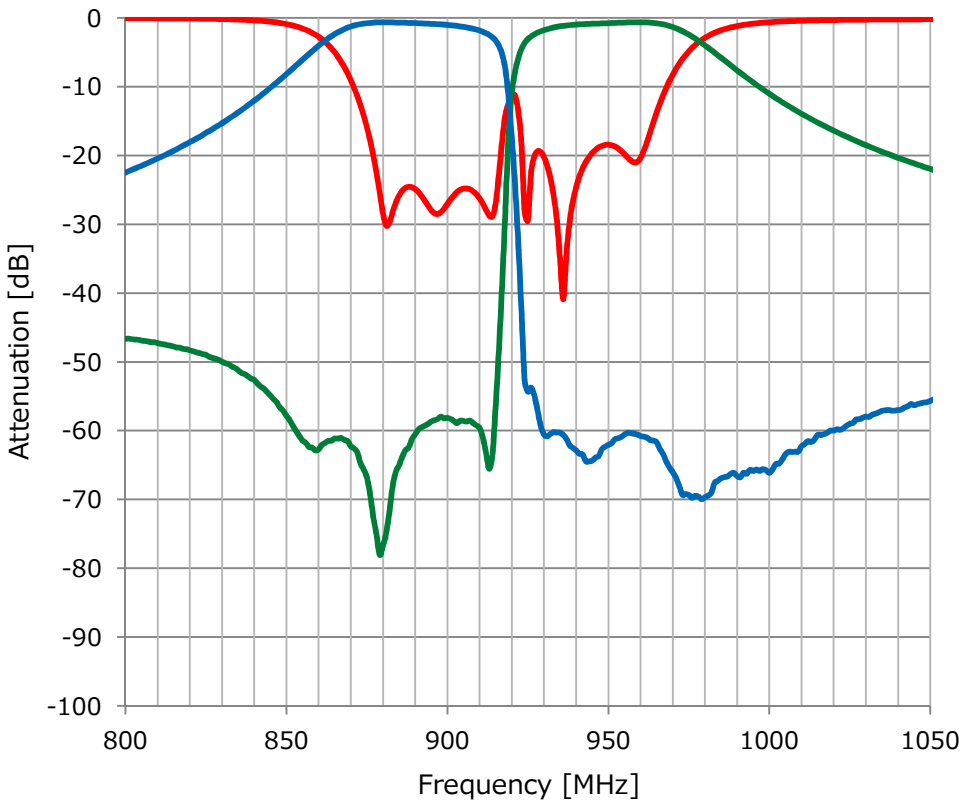

All rights reserved. All Specifications are subject to change without notice.

Mechanical Dimension

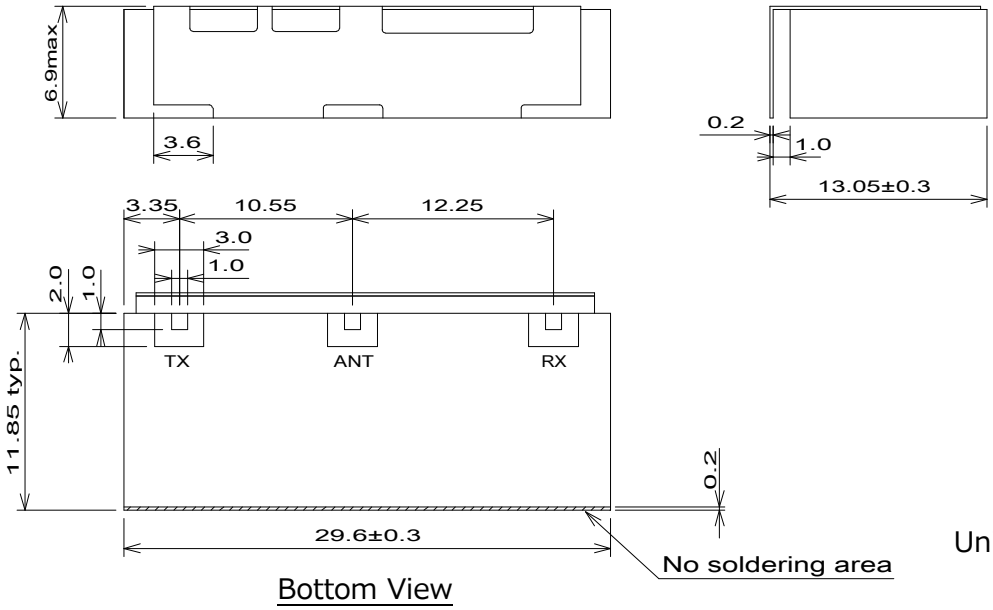

Units : mm

Tolerance unless otherwise specified : +/-0.2mm

Referenced Land Pattern

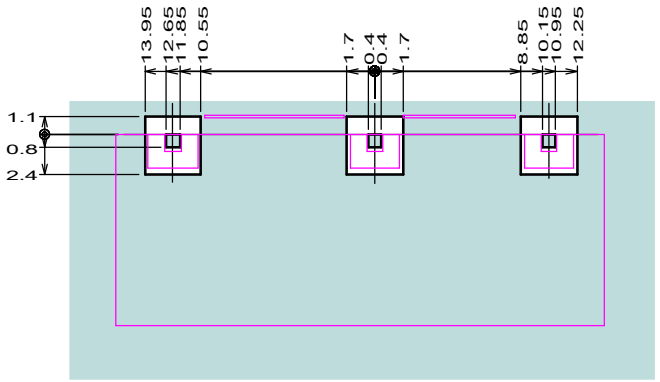

:Electrode

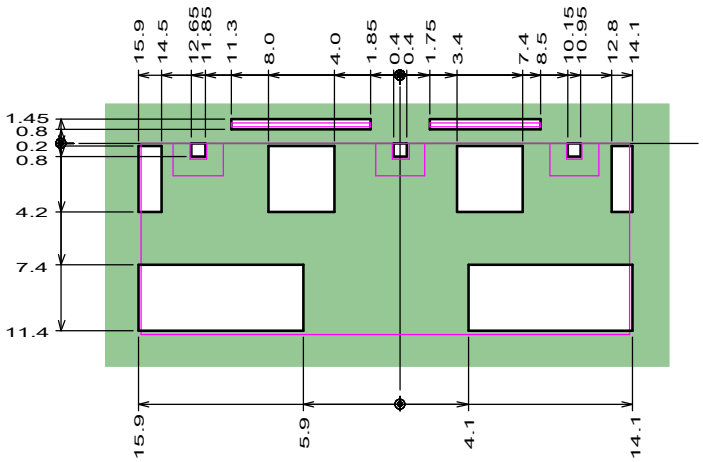

:Solder

:Resist

Units : mm

All rights reserved. All Specifications are subject to change without notice.