WBPF-A009

Electrical Specifications

Parameter	Frequency [MHz]	Specification -40℃ to 85℃	Typical Value @25℃
Center Frequency	2140		
Band Width	175		
Insertion Loss	2052.5 – 2227.5	2.0dB max	1.2dB
Passband Ripple	2052.5 – 2227.5	1.0dB max	0.6dB
VSWR	2052.5 – 2227.5	2.0 max	1.4
Attenuation			
Impedance		50 Ohm	50 Ohm
Input power		2Watt max	

Electrical Performance

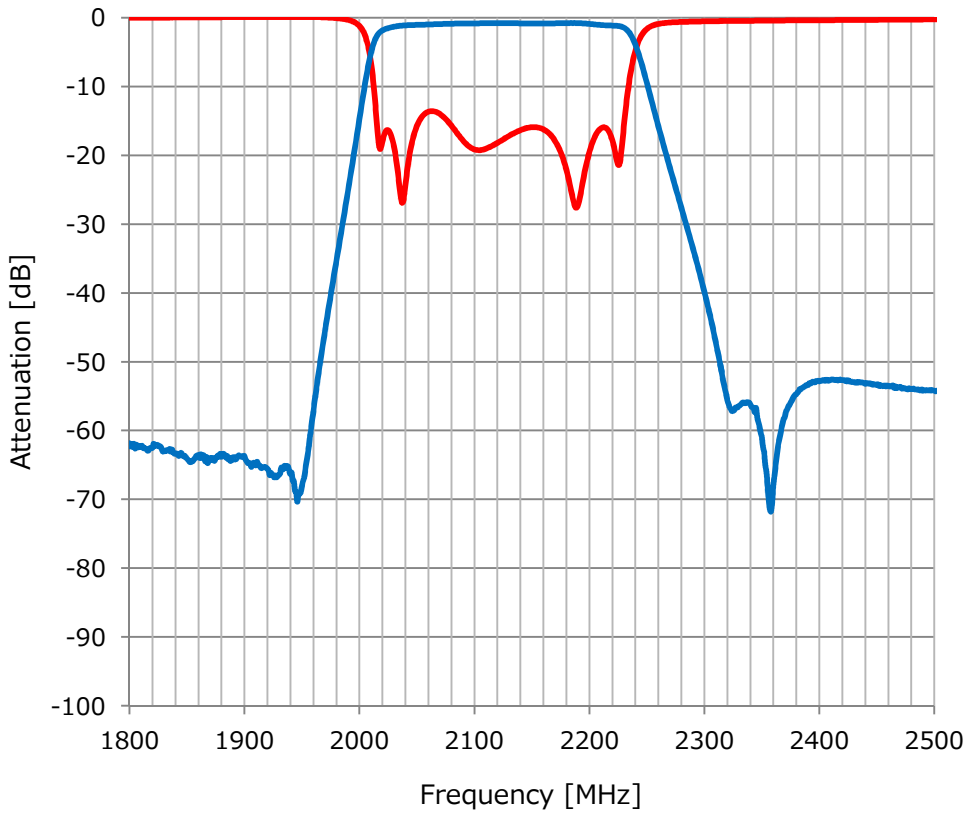

All rights reserved. All Specifications are subject to change without notice.

Mechanical Dimension

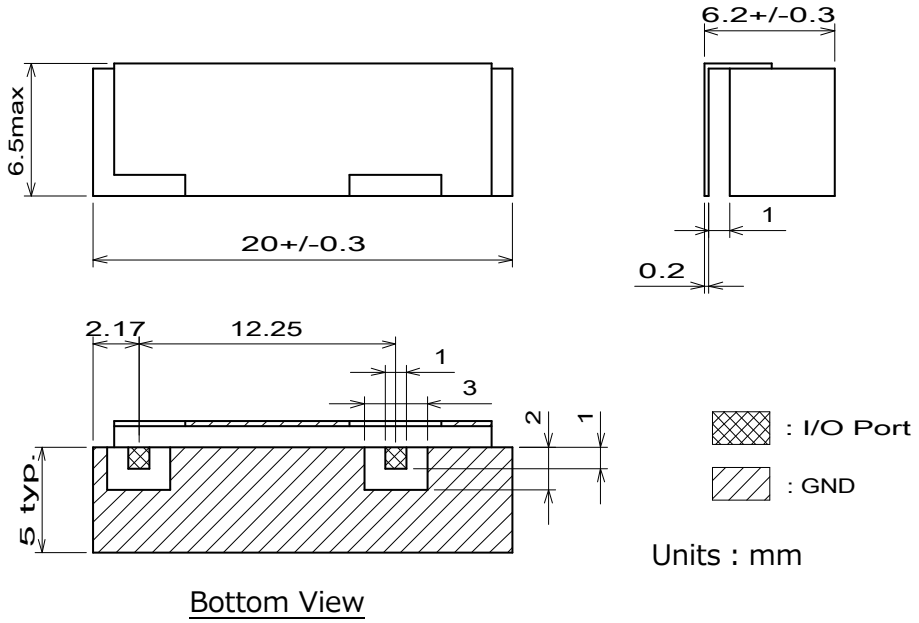

Tolerance unless otherwise specified : +/-0.2mm

Referenced Land Pattern

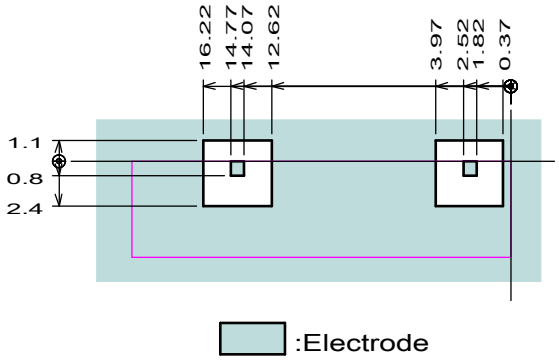

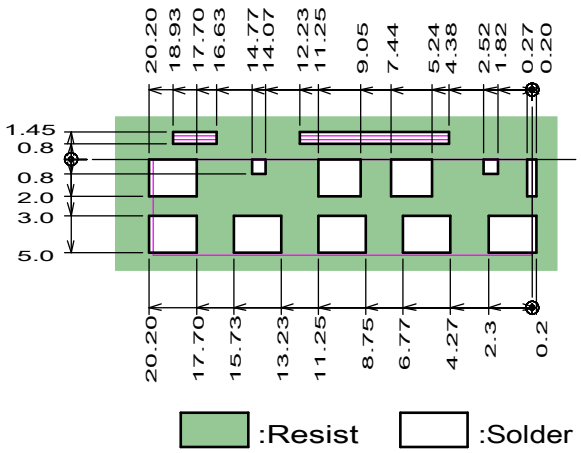

All rights reserved. All Specifications are subject to change without notice.